PRIME LINER BY BULL

GAS GRILL

G CLASS

4 BURNERS+IR **SIDEBURNER**

77246

ASSEMBLY AND OPERATING INSTRUCTIONS

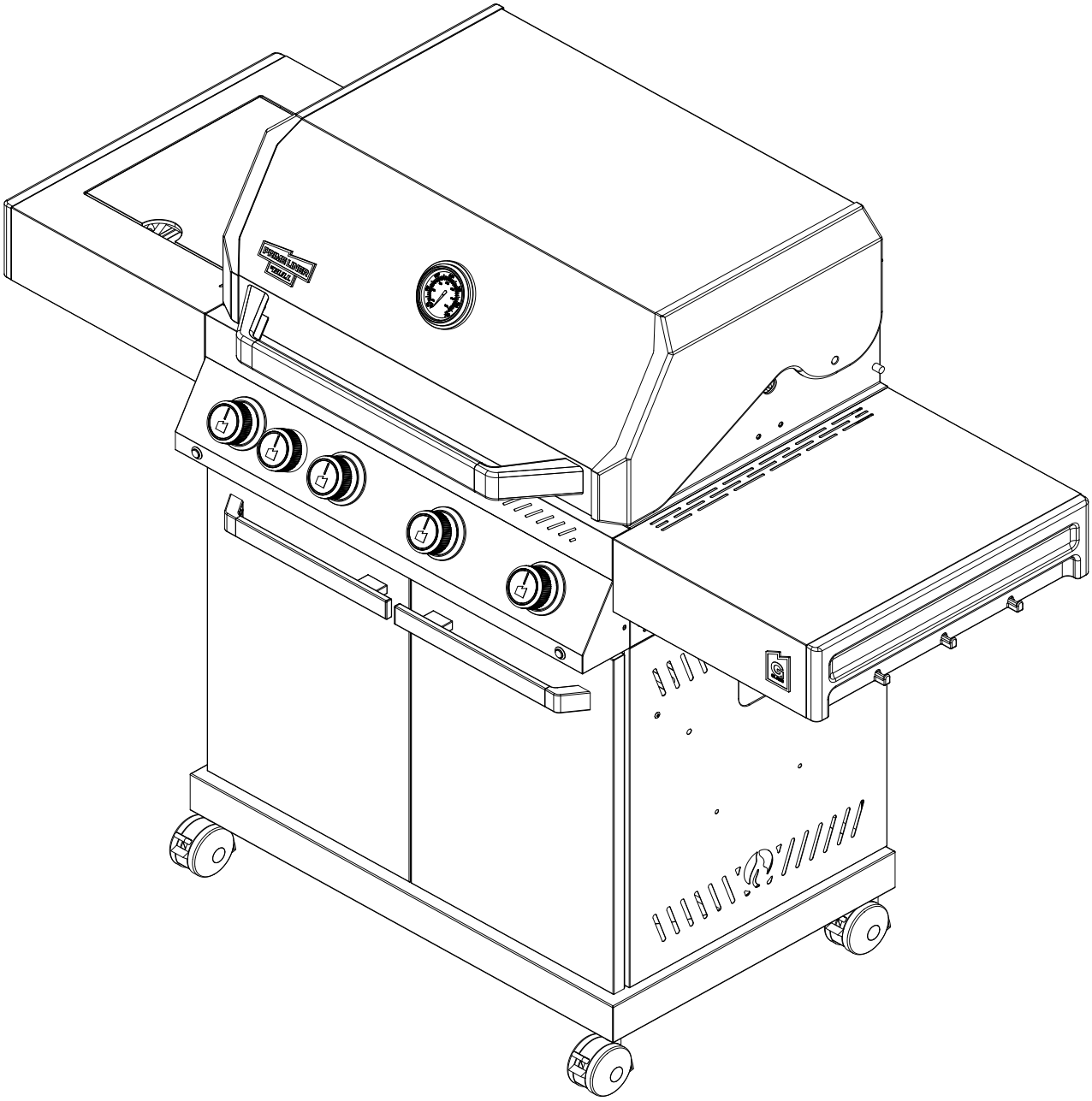

SAVE THESE INSTRUCTIONS FOR FUTURE REFERENCE

THIS GAS GRILL IS DESIGNED FOR OUTDOOR USE ONLY

IMPORTANT: READ ALL INSTRUCTIONS AND OPERATIONS BEFORE OPERATING THIS UNIT. FOLLOW ALL STEPS IN ORDER. NEVER ALLOW CHILDREN TO OPERATE THIS UNIT.

Warnings:

Only to be used outdoors.
Read the instructions before using the appliance.
Accessible parts maybe very hot, keep young children away.
Do not move the appliance during use.
Turn off the gas supply at the gas container after use.
Any modification of the appliance may be dangerous.
Parts sealed by the manufacturer or his agent must not be altered by the user.

Attention:

Some parts of this appliance become very hot, take special care when children or elderly are present.

For your safety:

Do not store or use gasoline or mentholated fuels or any other flammable vapors and liquids in the vicinity of this or any other appliance.
Never light a gas grill with gasoline or comparable fluids!
Suggestion: user should not change the assembly that the manufacturer packaged.

The gas cylinder is recommend to 11kg LPG gas bottle, it is sufficient for a heating period of approx.7 hours with full power.

1. Technical data

Model: 77246

BULL EUROPE LTD
SAN GWANN, MALTA

PRIME LINER BULL

CE 2575-26

Product name	GAS GRILL PRIMELINER G CLASS				
Model Number	77246				
Gas Category	■ $I_{3+(28-30/37)}$		☐ $I_{3B/P(30)}$	☐ $I_{3B/P(37)}$	☐ $I_{3B/P(50)}$
Gas and Supply Pressure	Butane(G30)	Propane(G31)	Butane/Propane	Butane/Propane	Butane/Propane
	28-30 mbar	37 mbar	29 mbar	37 mbar	50 mbar
Country of Destination	$I_{3+(28-30/37)}$: BE,CH,CY,CZ,ES,FR,GB,GR,IE,IT,LT,LU,LV,PT,SK,SI,TR,RU $I_{3B/P(30)}$: AL,CY,CZ,DK,EE,FI,FR,HU,IT,LT,NL,NO,RO,SE,SI,SK,HR,TR,BG,IS,LU,MT,MK,GB,GR,LV,IS $I_{3B/P(50)}$: AT,CH,CZ,DE,SK,LU $I_{3B/P(37)}$: PL				
Total Nominal Heat Inputs (Hs)	17,5kW(1273g/h)				

Warning:
Use Outdoors Only .
Read the instructions before using the appliance.
Warning: Accessible parts may be very hot. Keep young children away.

4 170395 772465

2. Exploded View

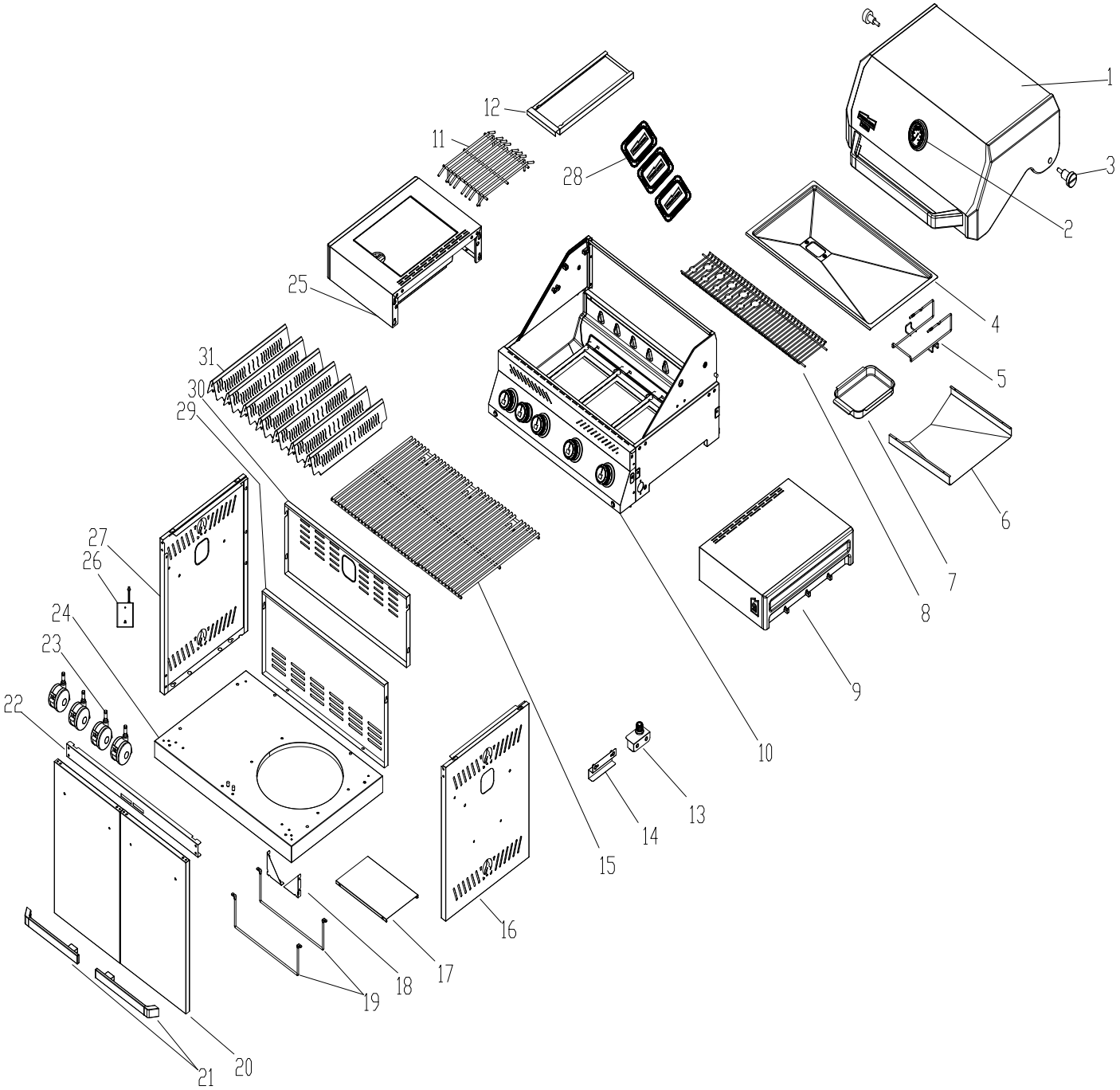

3. Single part list

no	parts name	qty
1	lid assembly	1
2	Thermometer assembly	1
3	Lid axle	2
4	Grease tray	1
5	Grease box bracket	1
6	Gas cylinder insulation board	1
7	Grease box	1
8	Warming rack	1
9	Right side table assembly	1
10	Firebox assembly	1
11	Infrared left side burner grid	1
12	Infrared side burner grease box	1
13	Ignitor assembly	1
14	Bellows guide groove	1
15	450*240 SS cooking grid	3
16	Cabinet right side panel	1
17	Cylinder bottom panel	1
18	Triangle fixing bracket	2
19	Cylinder bracket	2
20	Door panel	2
21	Door handle	2
22	Cabinet front crossbeam	1
23	Casters	4
24	Cabinet bottom panel	1
25	Infrared left side burner assembly	
26	Battery box	1
27	Cabinet left side panel	1
28	Foil box	3
29	Cabinet back panel	1
30	Cabinet upper back panel	1
31	Flame tamer	7

4. Fixing elements

A	B	C	D	E	F	G	H
8PCS 1/4-20	4PCS	7 PCS 5/32-32	4 PCS	6PCS 6PCS	4PCS	2 PCS	4PCS

5. Mounting steps

Make sure your grill is assembled properly. Detailed assembly instructions are packed with each grill giving specific assembly procedures for each model. Follow these instructions carefully to ensure the correct and safe assembly of the grill.

Caution: Although we take every effort to ensure that the assembly process is as easy as possible, it is inherent with fabricated steel parts that corners and edged can cause cuts if improperly handled during assembly procedures. Be careful while handling any parts during assembly. It is strongly recommended that you protect hands with a pair of work gloves.

STEP1

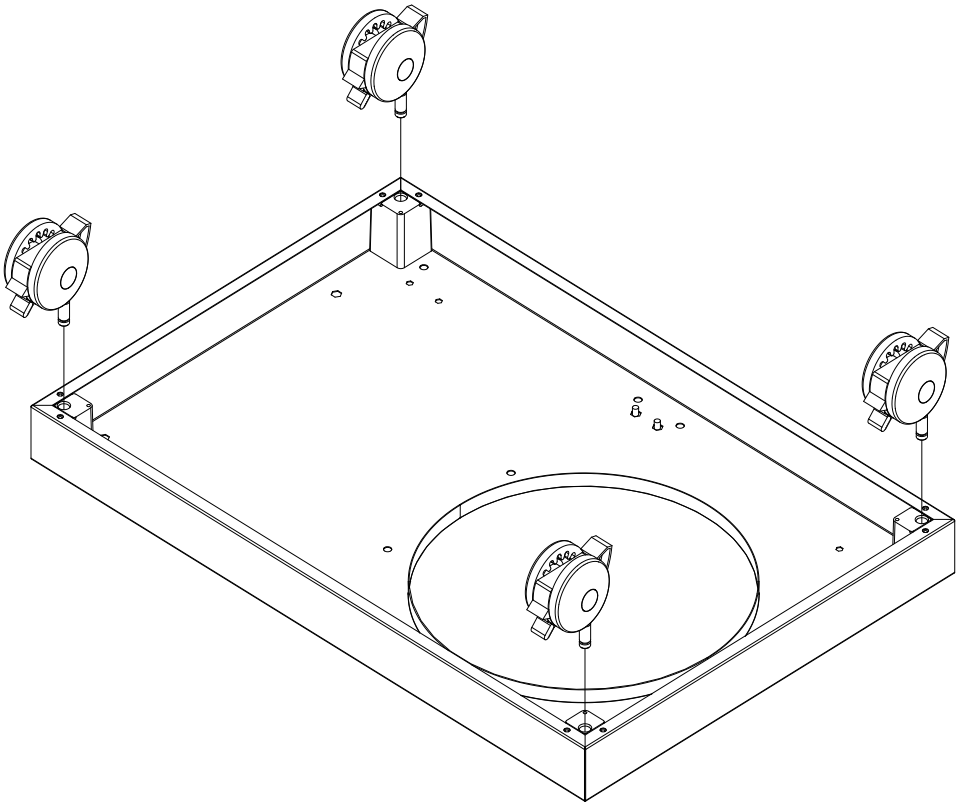

STEP2

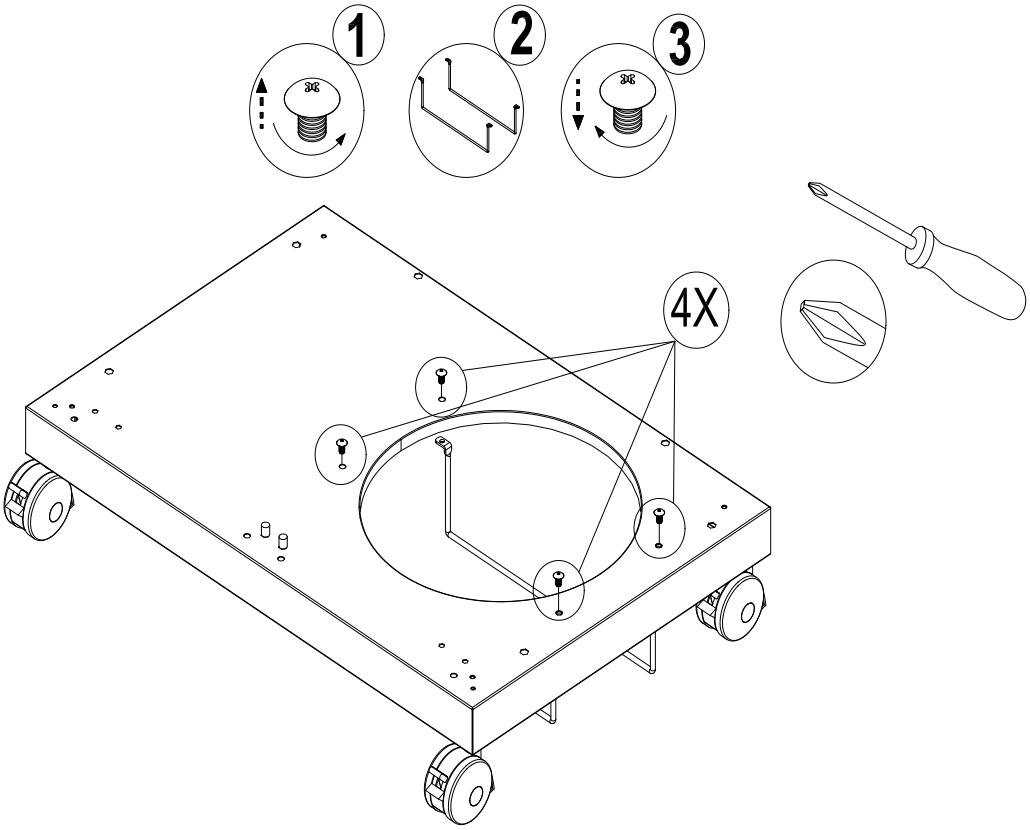

STEP3

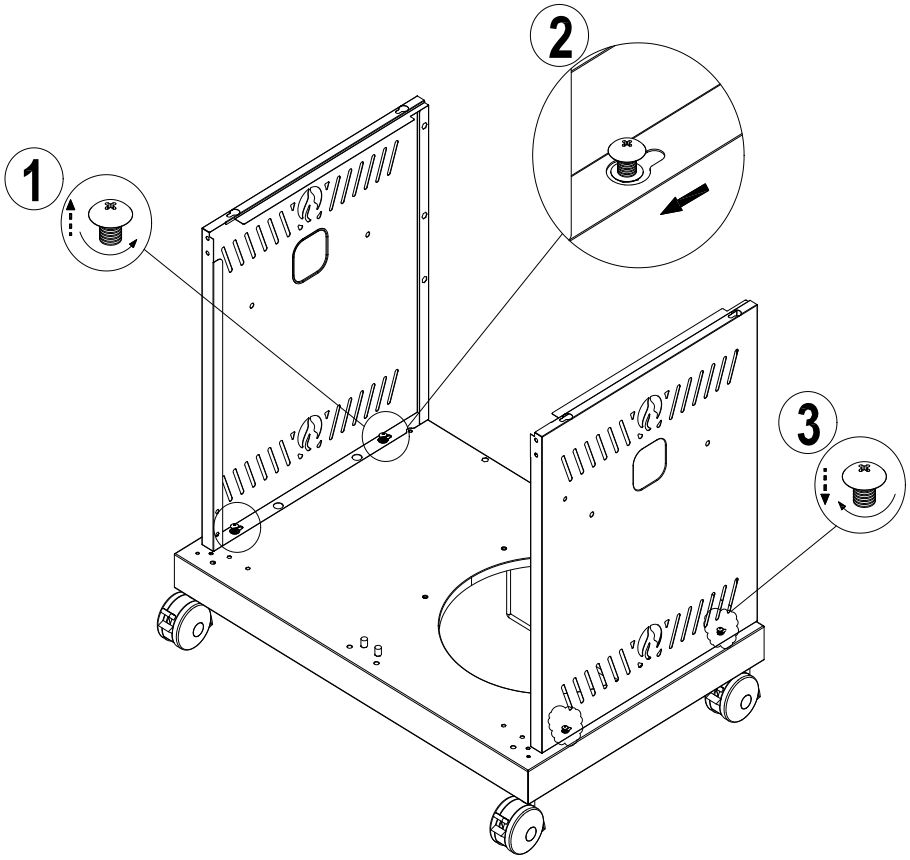

STEP4

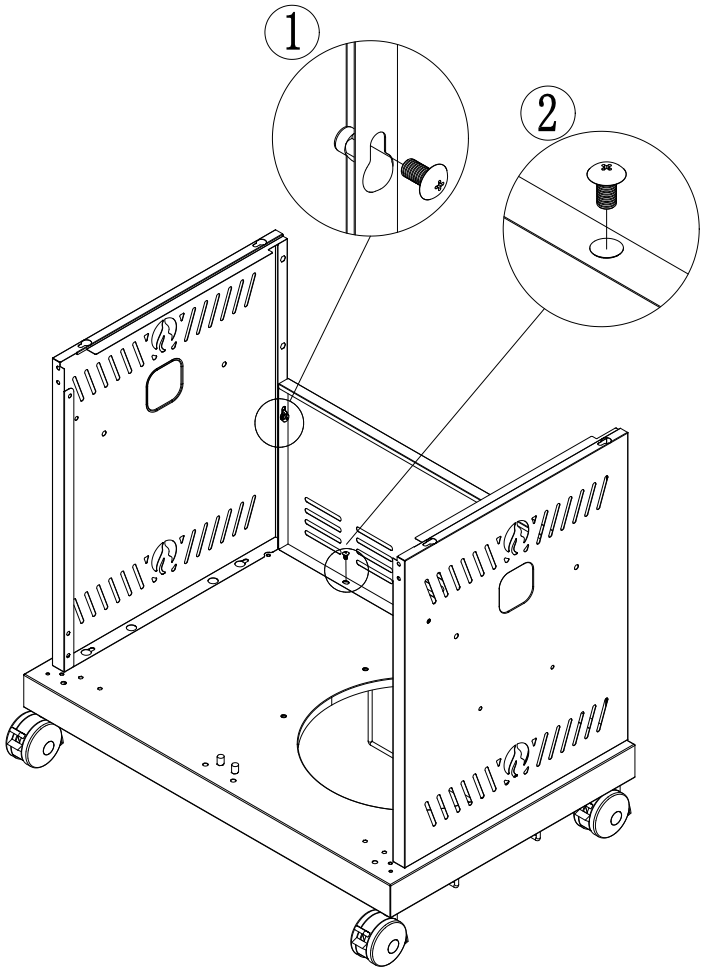

4 x A

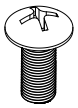

STEP5

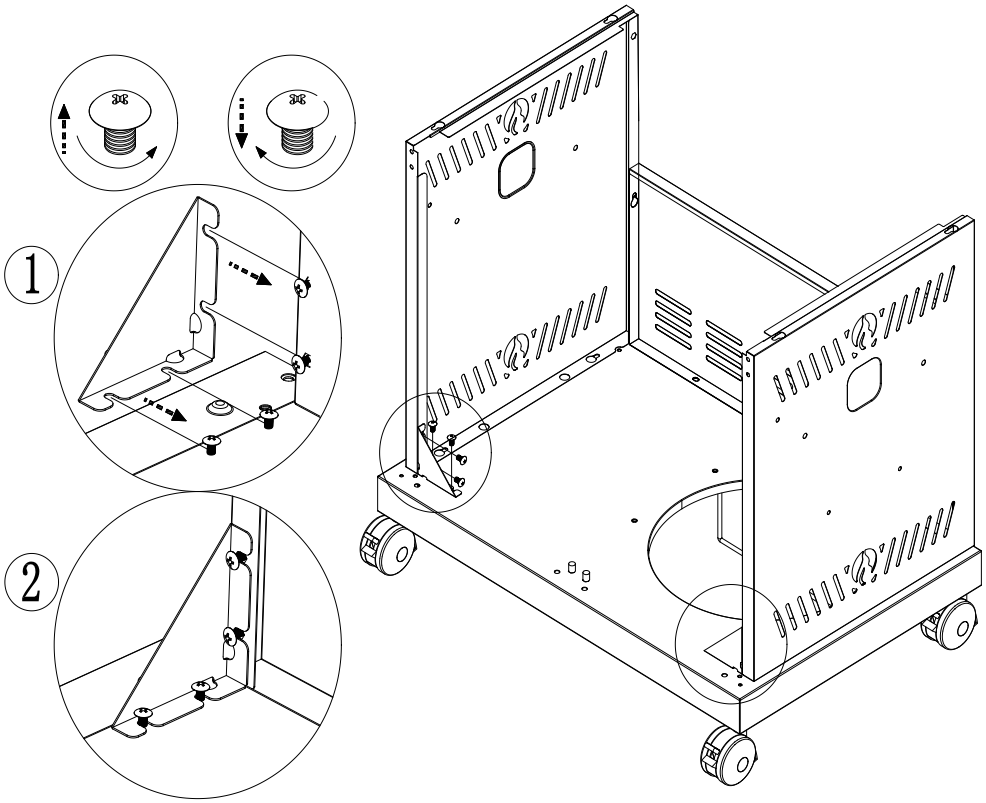

STEP6

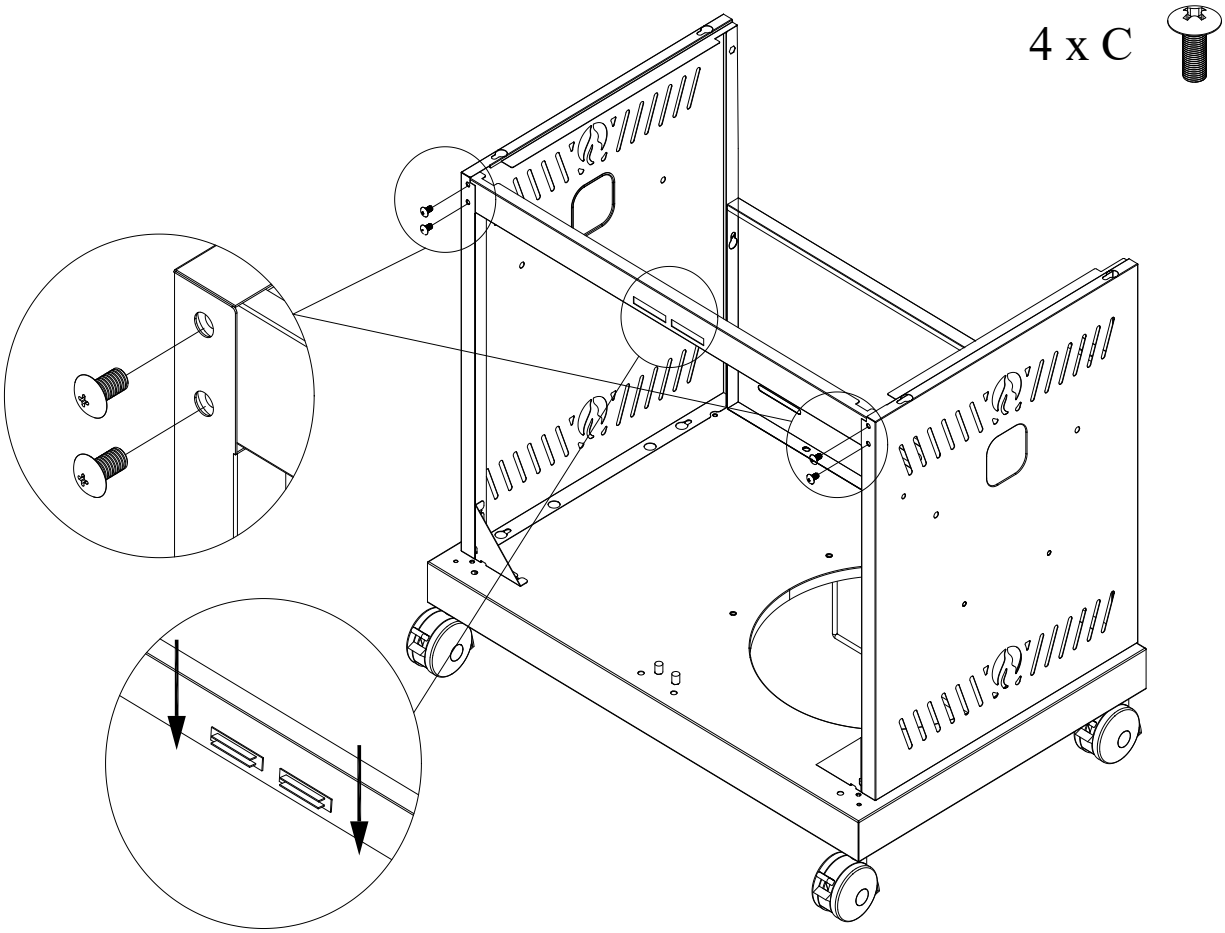

STEP7

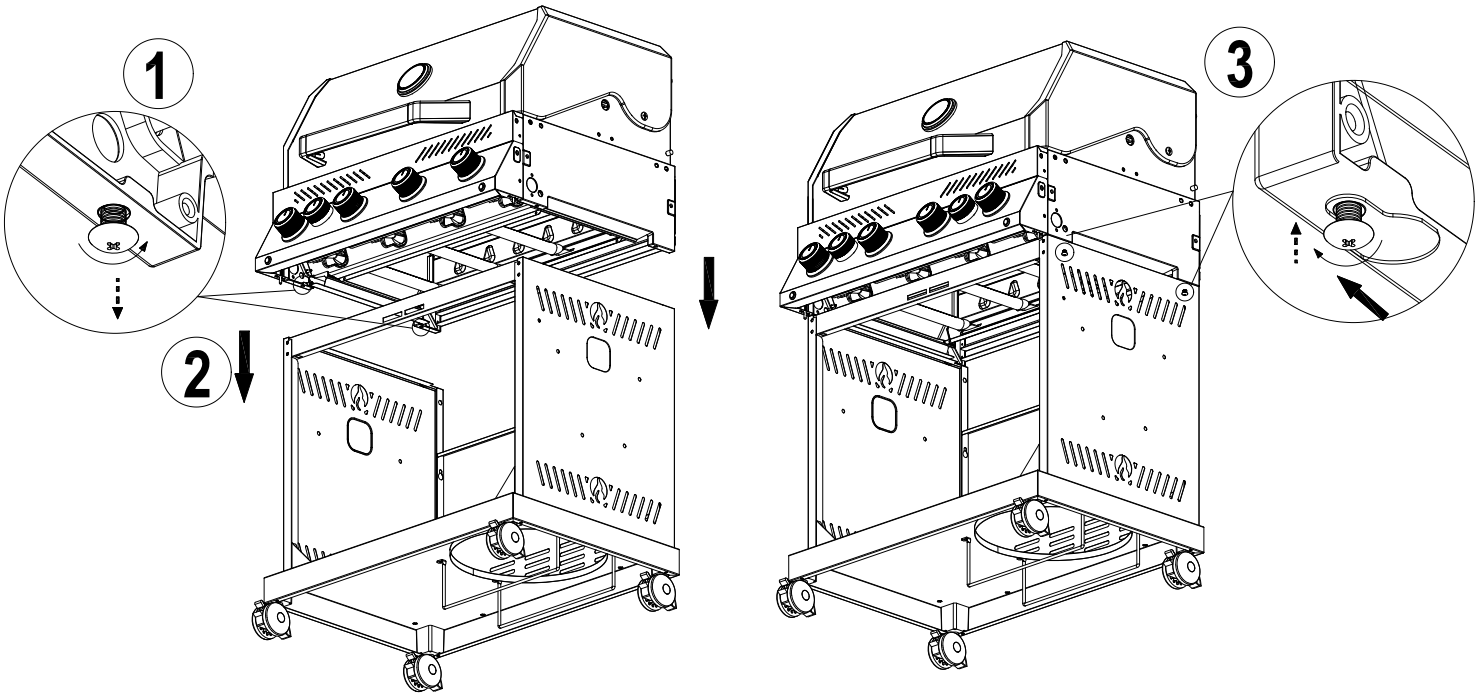

STEP8

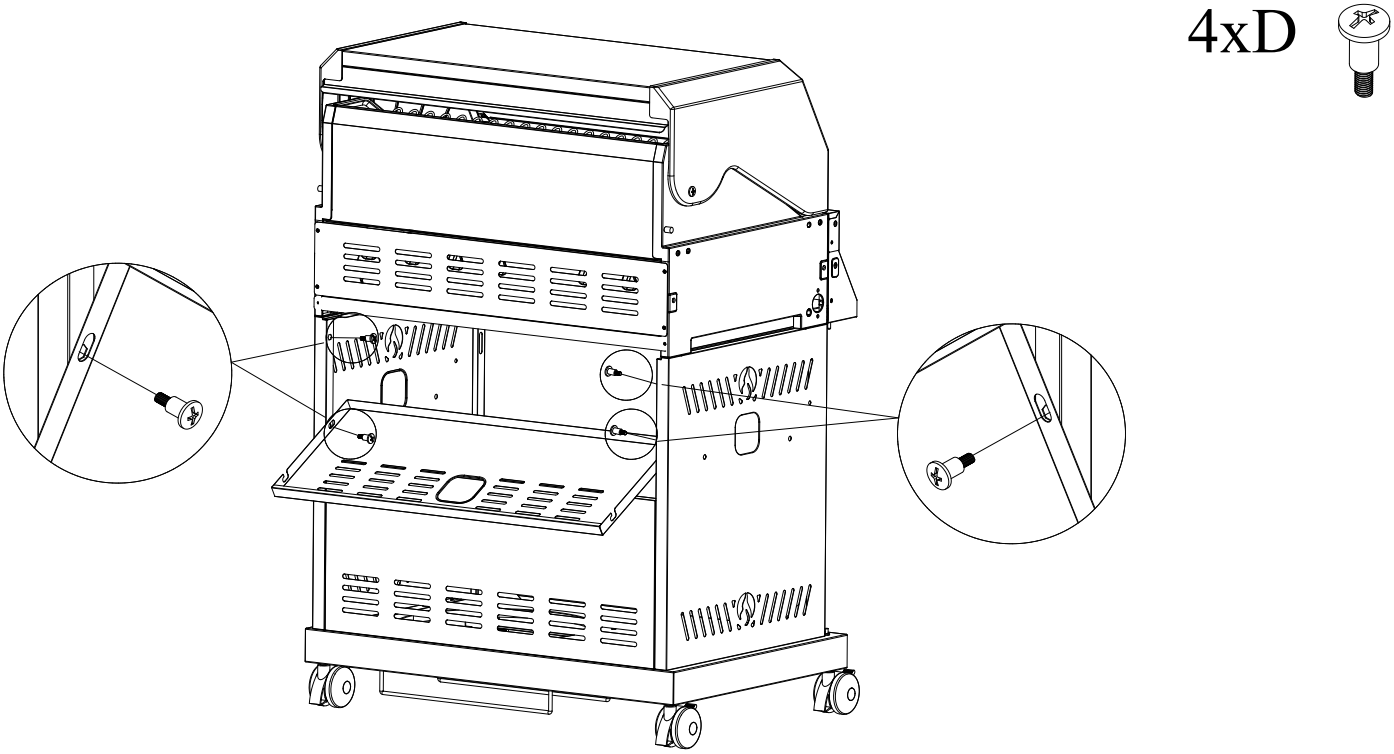

STEP9

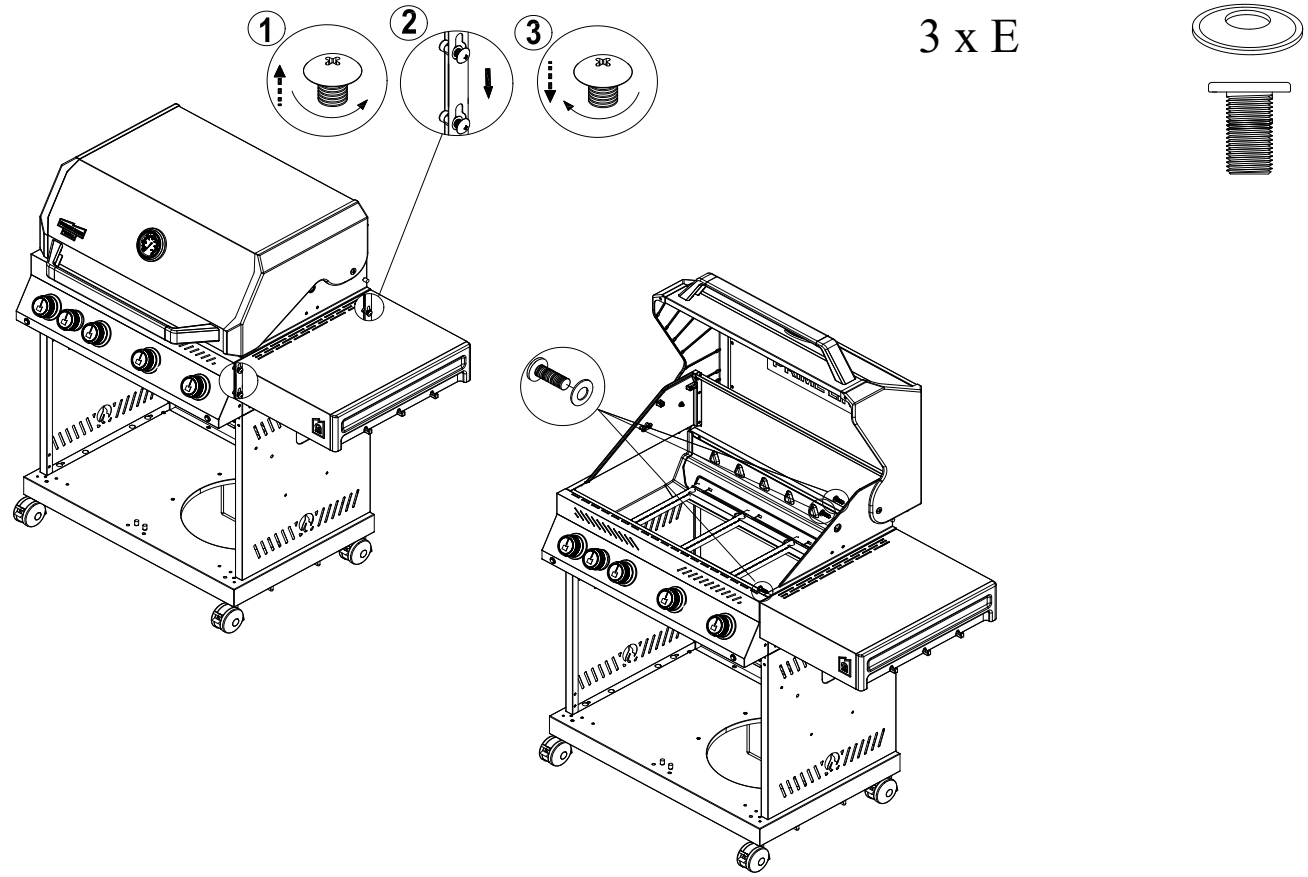

STEP10

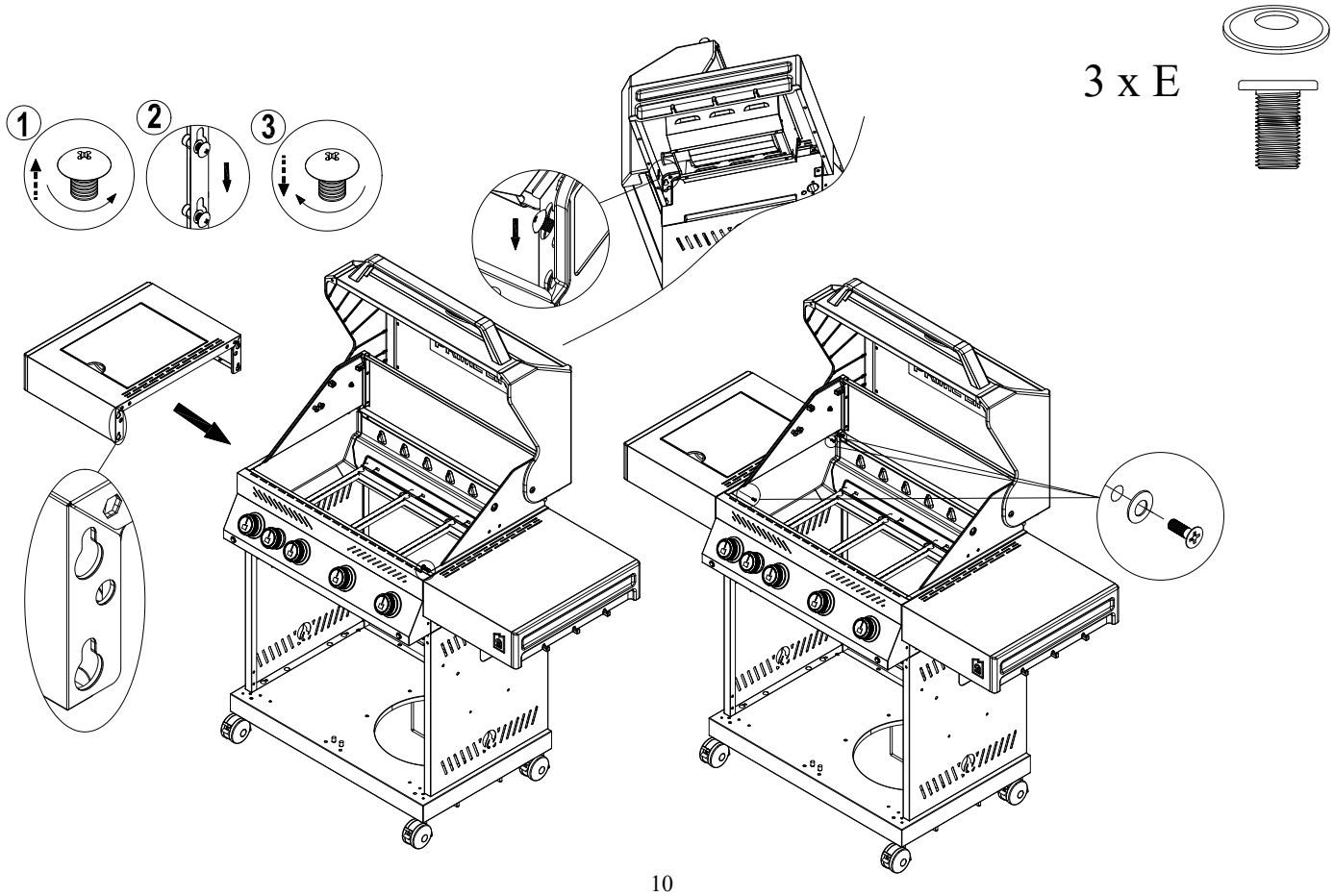

STEP11

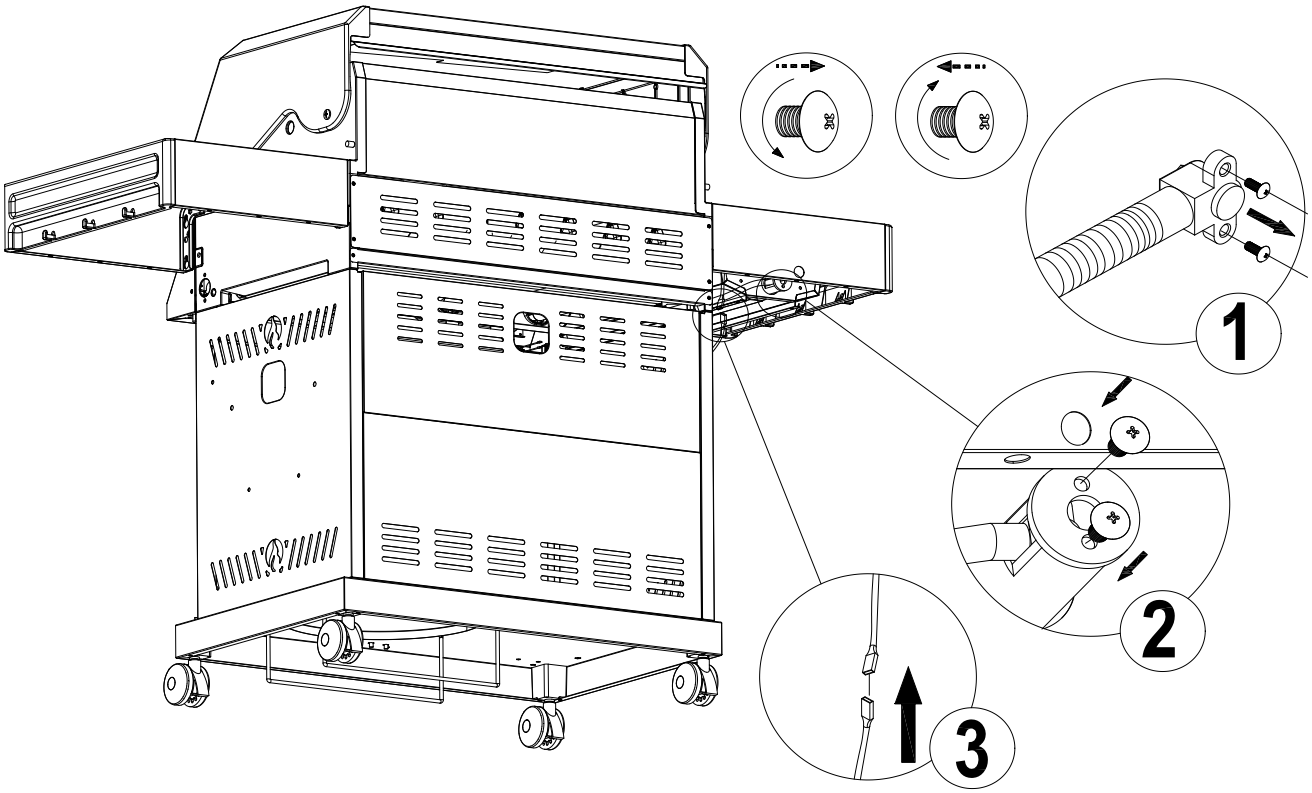

STEP12

1 x C

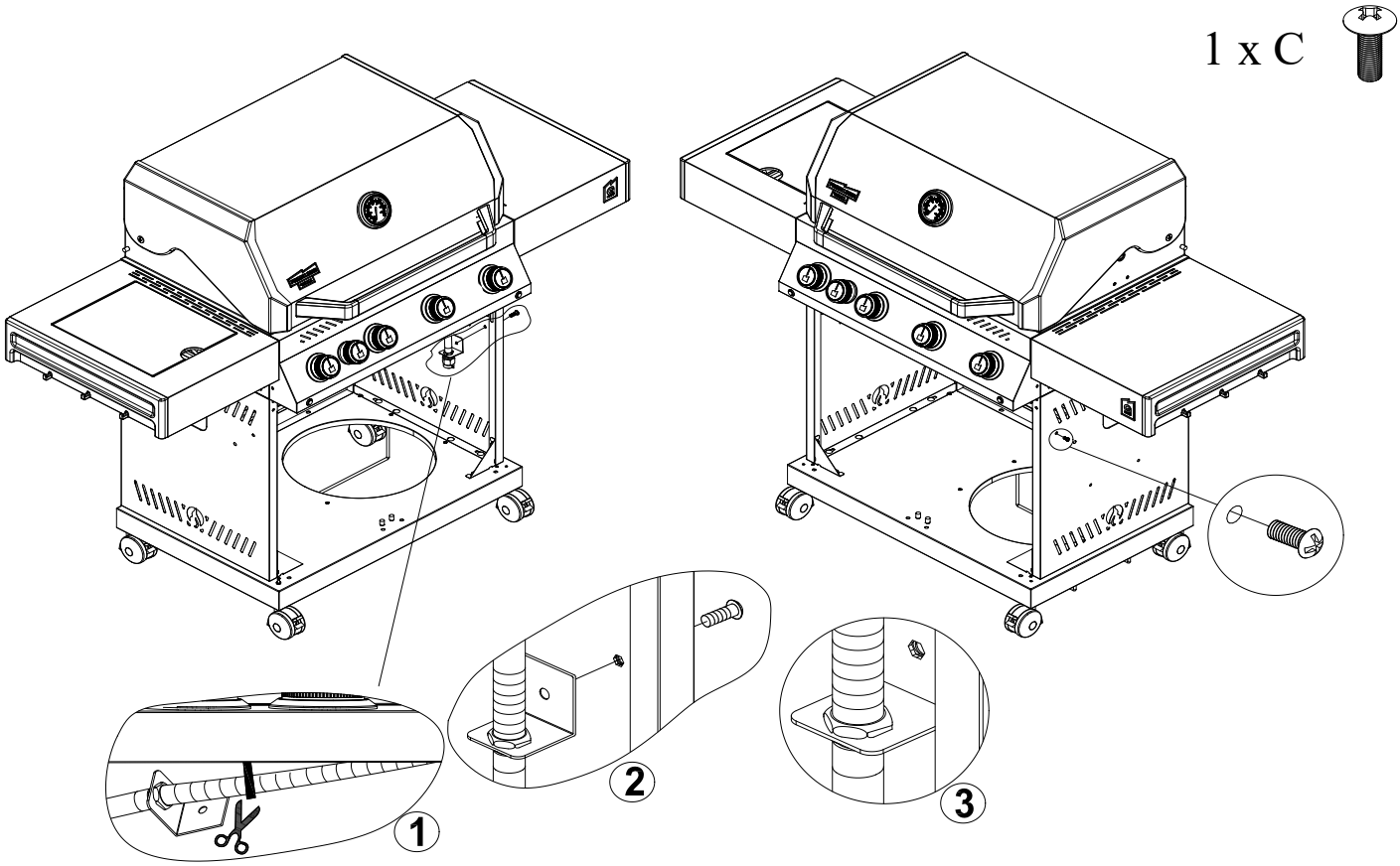

STEP13

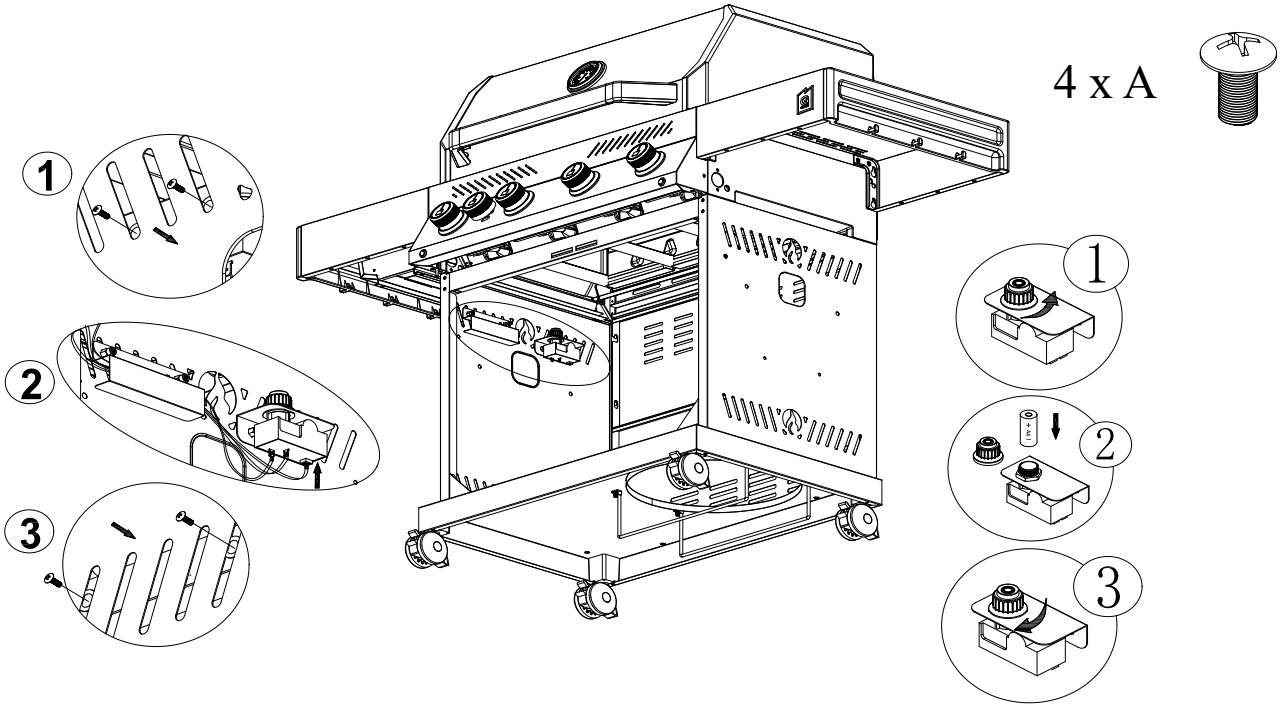

STEP14

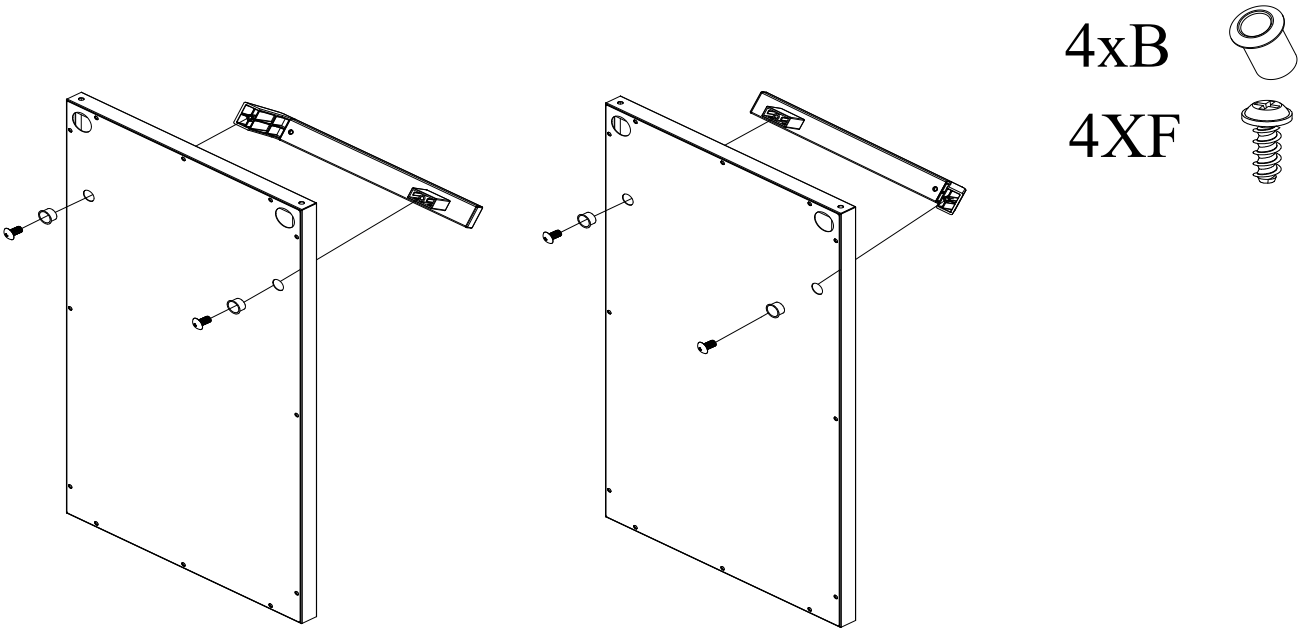

STEP15

2 x G

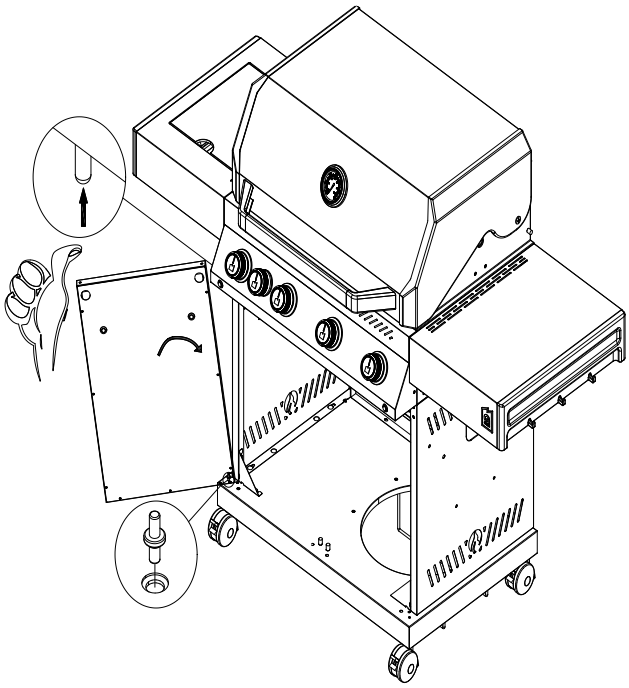

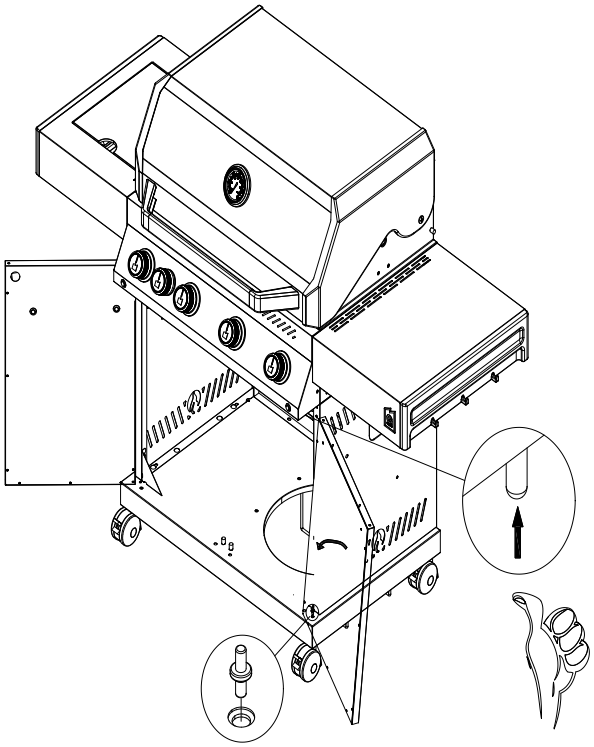

STEP16

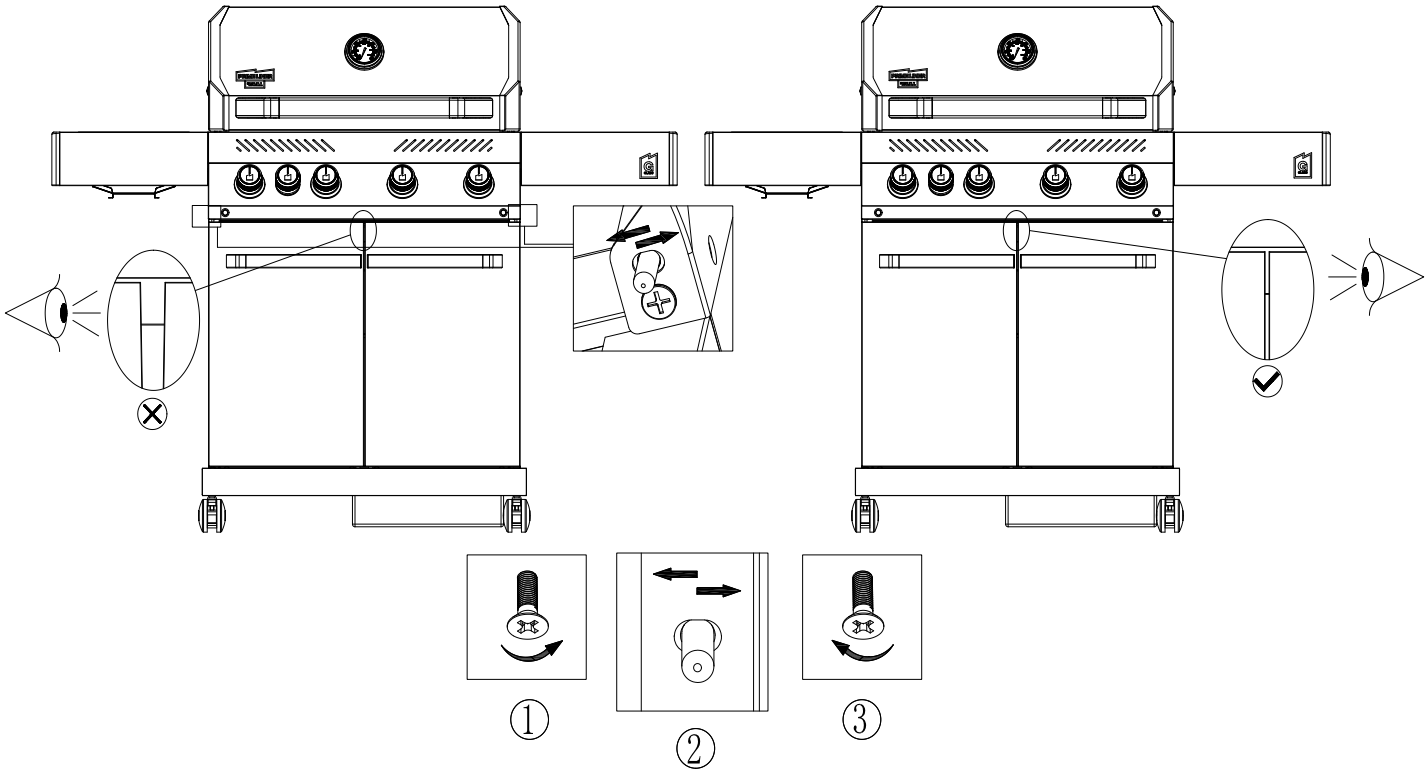

STEP17

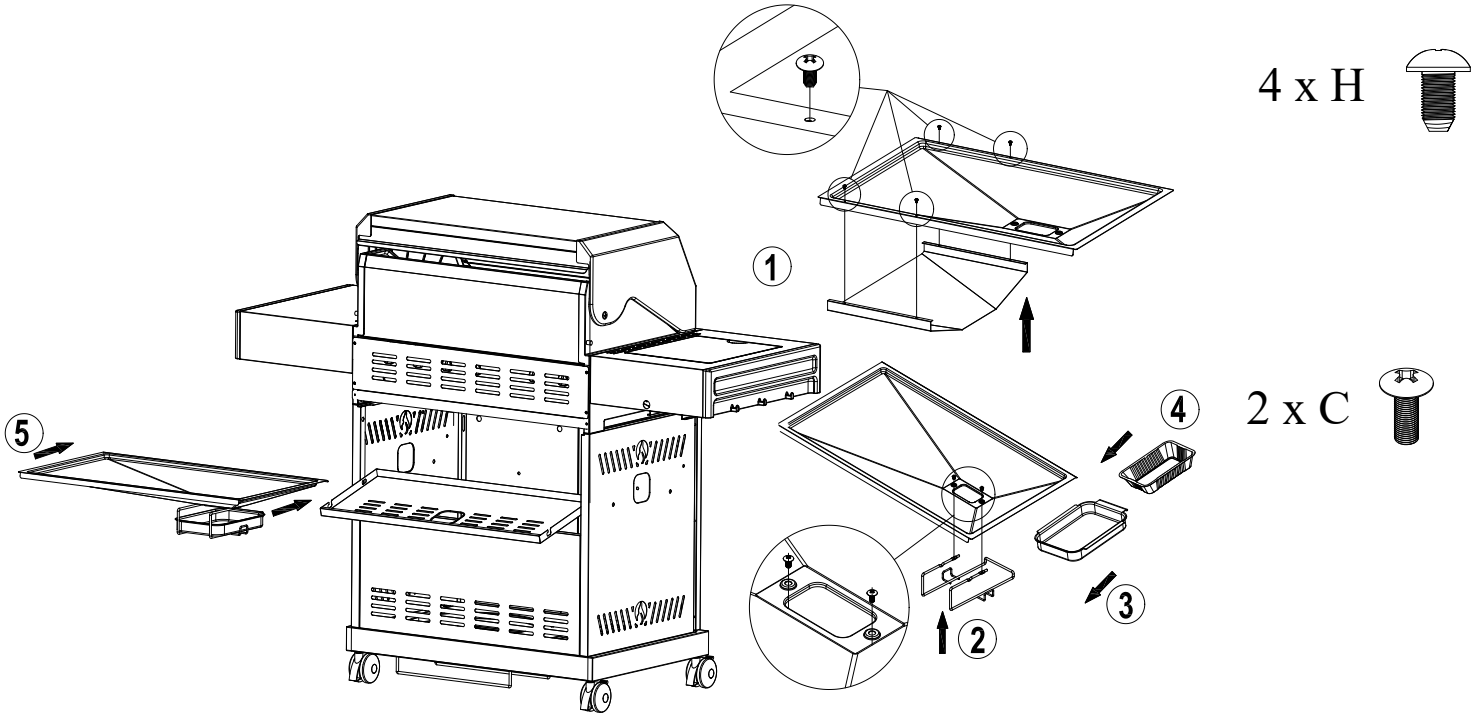

STEP18

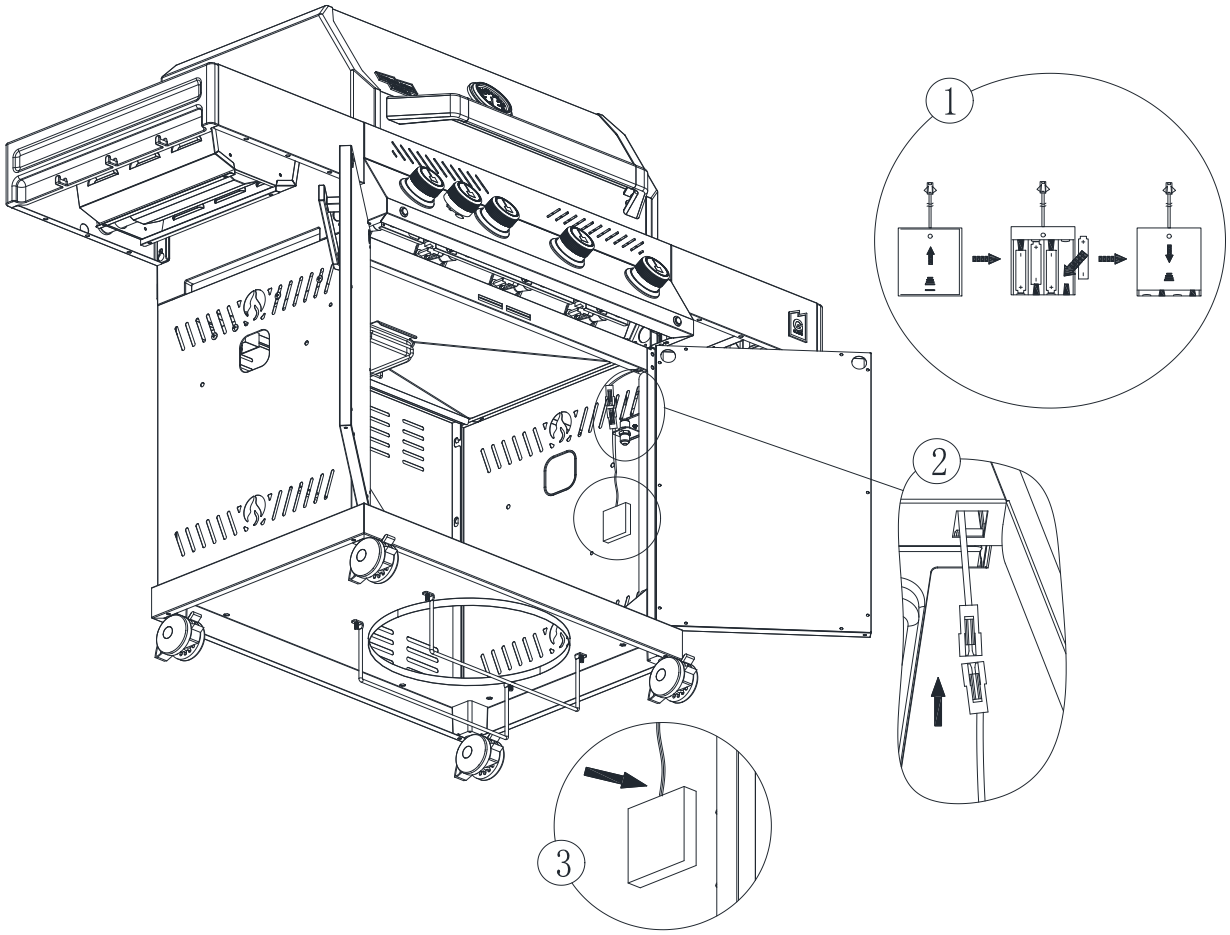

STEP19

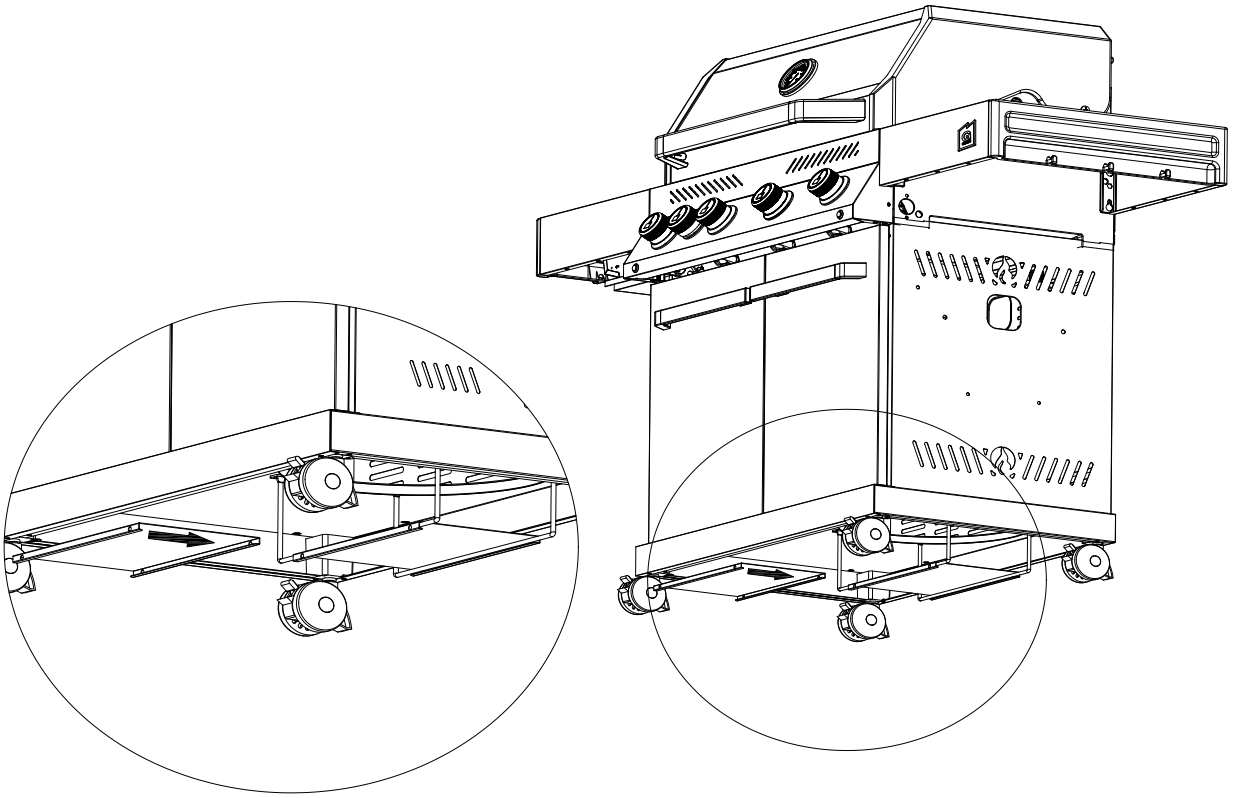

STEP20

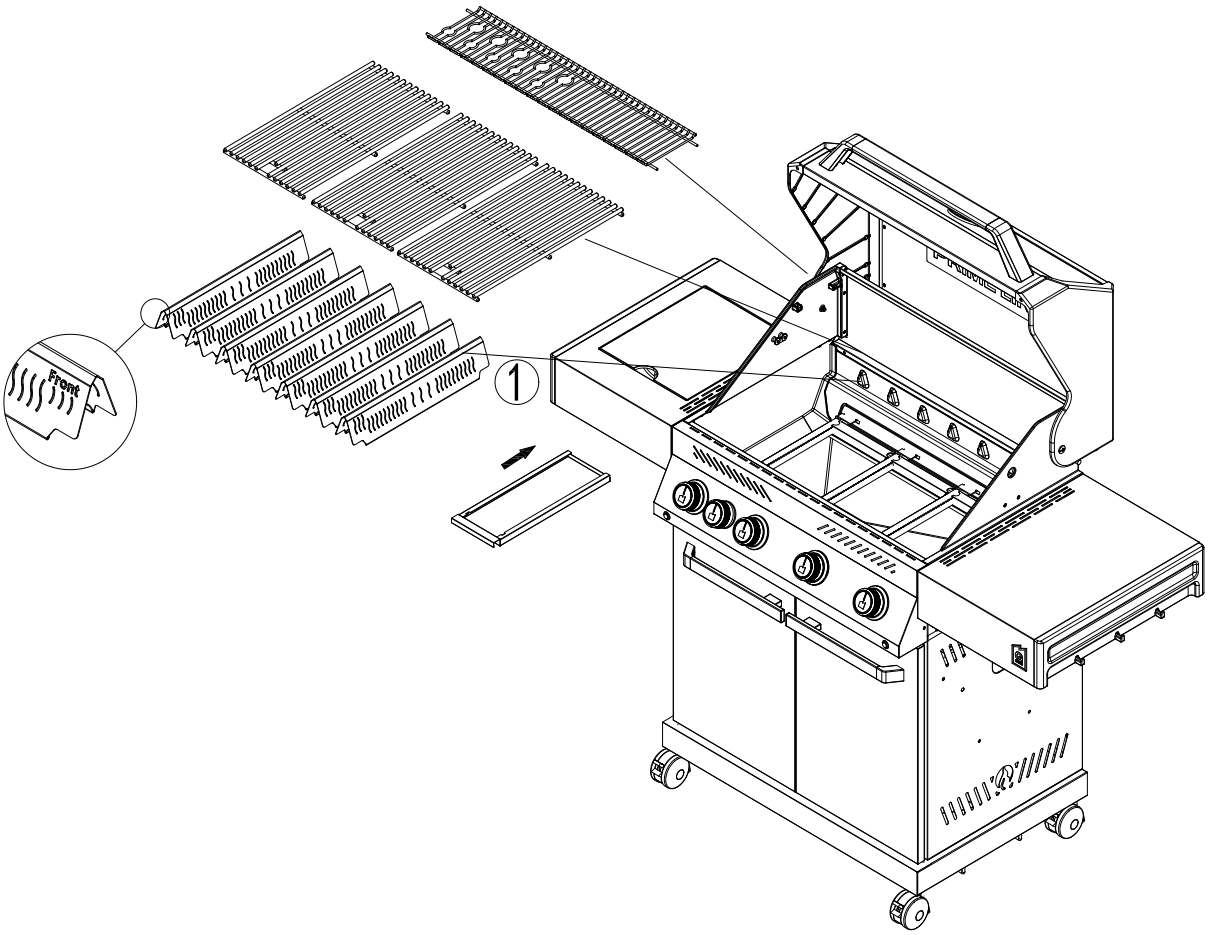

GAS LEAK TEST

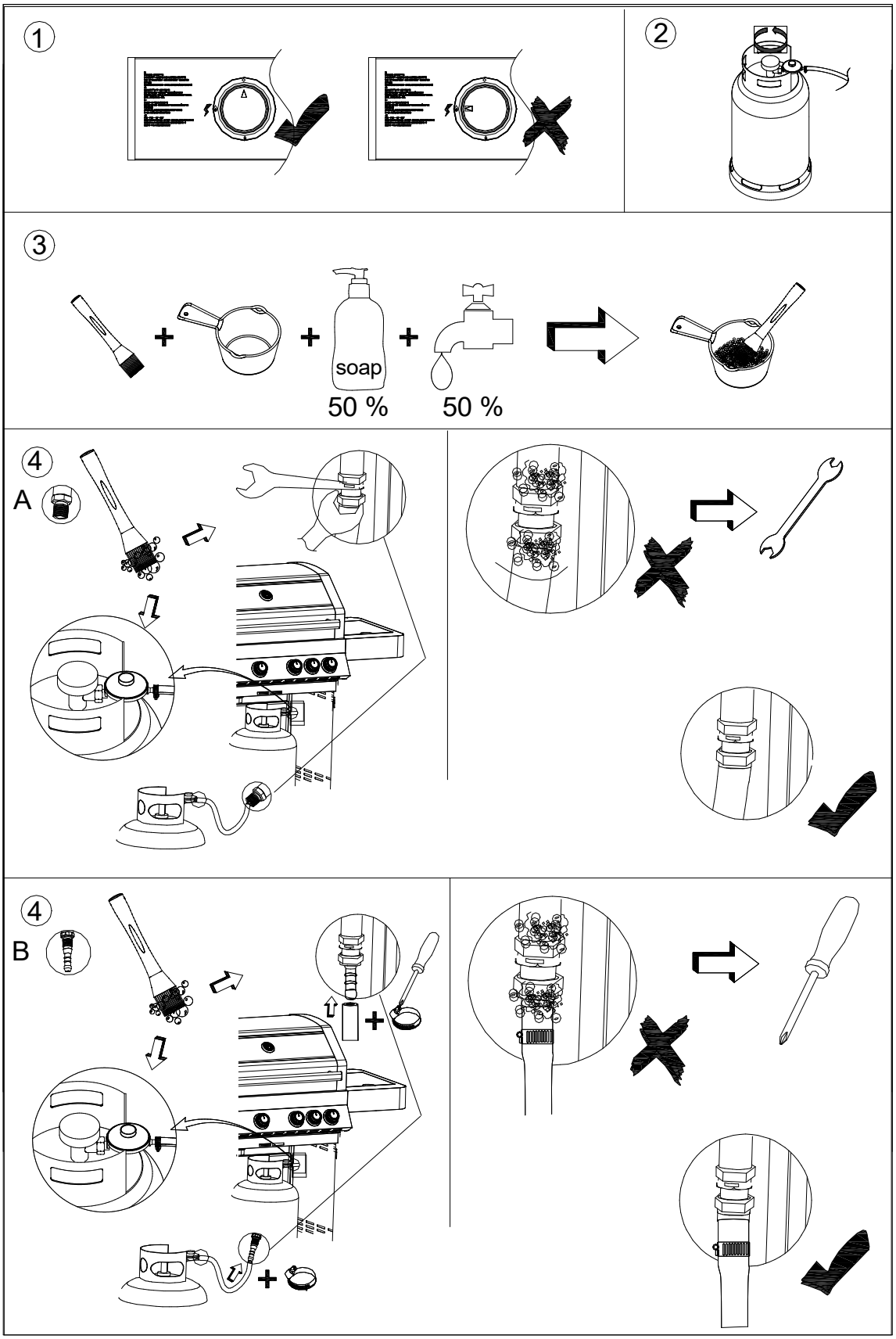

6. Preparation

You will need to purchase a LPG gas bottle and the pressure regulator should correspond to the pressure and gas category of the appliance, which can be obtained from your nearest Gas Retailer.

The regulator should be comply with EN16129 with current version and national regulation.

You will need to purchase a gas bottle and a 28-30/37 mbar regulator for I3+ and 28-30mbar regulator for I3B/P(30), 50 mbar regulator for I3B/P(50) to operate this gas grill which can be obtained from your nearest Gas Retailer.

See point 9 for farther instructions.
Strongly Recommends Information:
a) The gas cylinder is to be used only in the upright position.
b) Only to be used with a gas cylinder that does not exceed 500 mm in height and <245 mm in diameter.

c)This appliance must only be used with an approved hose and regulator.

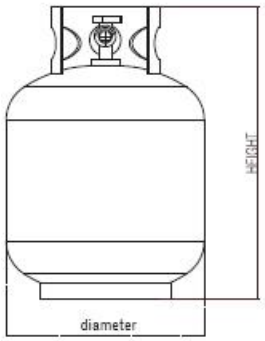

Energy saving tips:
a) Reduce the opening time of the lid.
b) Turn the grill off as soon as cooking is completed.
c) Preheat the gas grill for 10 to 15 minutes only.
(Except for the first use)
d) Do not preheat longer then recommended.
e) Do not use a higher setting than required.

Connect the hose and regulator to the gas container at the right side of the gas grill .Keeping in mind that the gas container must be kept away from heat and in a safe position .The hose dimension is 8mm diameter.

7. Installation

After purchasing your gas bottle you will then be ready to set it up with your gas grill.
a) **When changing the gas bottle which shall be carried out away from any source of ignition.** Position the gas bottle at the side of your gas grill, not underneath, keeping in mind that the bottle must be kept away from heat and in a safe position.
b) When ready to use your gas grill insert the regulator into the gas bottle valve and tighten firmly. **The maximum length of hose shall not exceed 1.5m.**

Warning: Before attempting to light your gas grill you must refer to your lighting instructions and warning / safety points.
Check the hose before each use, searching for cracking, cuts or any abrasions. If the hose is found to be faulty in any way do not attempt to use your gas grill.
When changing your gas bottle ensures that there are no sources of ignition close by i.e. fires, cigarettes, naked flames etc. Make sure that the appliance is switched off.

Ensure that the hose is not subjected to twisting which will affect the gas flow when using your gas grill. Also the hose must not have undue tension and must not touch any part of the gas grill which may be hot.

Please choose flexible hose whose heatproof higher than 80℃

Every 2 years changing the flexible hose when the national conditions require it.

How to connect a gas bottle

a) Turn the orange cap so that the arrow is pointing to the gap in the shroud.
b) Remove the orange safety cap by pulling the lanyard out, then out. Do not use tools. Leave the cap hanging.
c) Check that the black sealing washer is fitted inside the cylinder valve. Place the regulator down over the valve with switch.
d) Turn the switch clockwise on gas bottle-then turn on the gas grill as instructed.

Warning: Always test gas line for leaks at connector with soap water finishing all connections.

How to disconnect a gas bottle

a) Except for twin-cylinder installations with a changeover valve, turn off the gas tap if fitted to the appliance. Wait until the burner and pilot light have gone out. For installations with a changeover valve, it is only necessary to switch off the empty cylinder.
b) Replace the orange safety cap onto the empty cylinder.

GENERAL

Although all gas connections on the grill are leak tested at the factory prior to shipment, a complete gas tightness check must be performed at the installation site due to possible mishandling in shipment, or excessive pressure unknowingly being applied to the unit. Periodically check the whole system for leaks following the procedures listed below. If the smell of gas is detected at anytime you
should immediately check the entire system for leaks.

BEFORE TESTING

Make sure that all packing material is removed from the grill including tie-down straps.

DO NOT SMOKE WHILE LEAK TESTING. NEVER PERFORM LEAK TEST WITH AN OPEN FLAME.

Make a soap solution of one part liquid detergent and one part water. You will need a spray bottle, brush, or rag to apply the solution to the fittings. For the initial leak test, make sure the L.P. cylinder is 80% full.

TO TEST

1.Make sure the control valves are in the OFF position, and turn on the gas supply.

2.Check all connections from the gas regulator and supply valve up to and including the connection to the manifold pipe assembly (the pipe that goes to the burners). Soap bubbles will appear where a leak is present.

3.If a leak is present, immediately turn off the gas supply and tighten the leaky fittings.

4.Turn the gas back on and recheck.

5.Should the gas continue to leak from any of the fittings, turn off the gas supply.

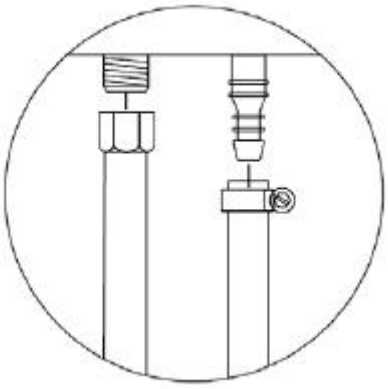

Install Regulator Hose

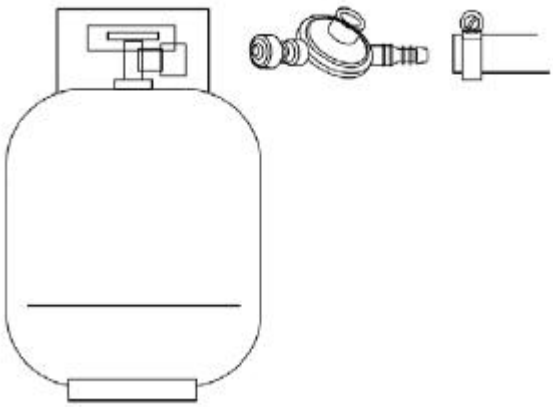

Install Gas Tank & Regulator Hose

Do not use the grill until all connections have been checked and do not leak.

ALWAYS CHECK FOR LEAKS AFTER EVERY GAS TANK CHANGE

Check all gas supply fittings for leaks before each use. It is handy to keep a spray bottle of soapy water near the shut-off valve of the gas supply line. Spray all the fittings. Bubbles indicate leaks.

8. Warning and safety points

Please read the following points before using your gas grill:

a) **Read the instructions before using the appliance**. Please follow all assembly instructions in this manual; if instructions are not followed it may cause problems in use.

b) This gas grill accessible **parts maybe very hot when being used. Keep young children away.** Use protective when handling particularly hot components.

c) In the event of a gas leak shut off gas to the gas grill, extinguish any open flames, open lid and if leak continues check for damages, poor connections etc. Contact your local gas dealer

immediately if the problem can't be solved.

d) **Do not move Gas grill during use**.
e) Do not use or store any flammable liquids or vapors in the vicinity when operating the gas grill.
f) This gas grill only **to be used outdoors.**
g) Do not use a naked flame to check for gas leaks.
h) Do not operate gas grill if there is a gas leak. Turn off the gas supply.
i) Do not attempt to disconnect any gas fitting part if your gas grill is being used, on the gas grill or the gas regulator / bottle.
j) Care is advised when operating your gas grill, you should never leave unattended when in use. Turn off the gas supply at the gas container after use.
k) The gas grill should be cleaned on a regular basis.
Take care not to enlarge burner ports or orifice/nozzle openings when cleaning the burner or valves.
l) Do not attempt to use this appliance in a garage or any enclosed area. Also **this appliance must be keep away from flammable materials**, etc. We recommend keeping a distance of at least 0.5 to 1.0 meter clear of any flammable materials.
m) We would recommend that this gas grill be serviced by your local gas retail outlet at least once a year by a competent engineer. Do not attempt to service this appliance yourself.
n) **Any modification of the appliance may be dangerous**. Do not attempt any unauthorized interference of the main controls on this gas grill, i.e. gas taps, injectors, valves etc.

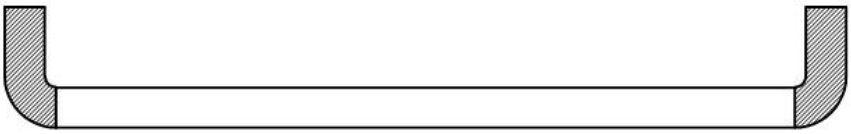

WARNING: The Handle Black Area (See Above Picture for Reference) Will Become Hot When the Gas grill In Use, BE CAREFUL! Do Not Touch The Black Area.

"Since this barbecue has no restriction in the emission of unburned gas, this barbecue must be installed and/or used outdoors or in an amply ventilated area. Were this BBQ in an amply ventilated area， the area must have at least 25% of the surface（sum of the wall surface）area open. "

Strongly recommends minimum clearances from combustible materials must be:

Rear - 600mm
Sides - 500mm
Top - 1000 mm

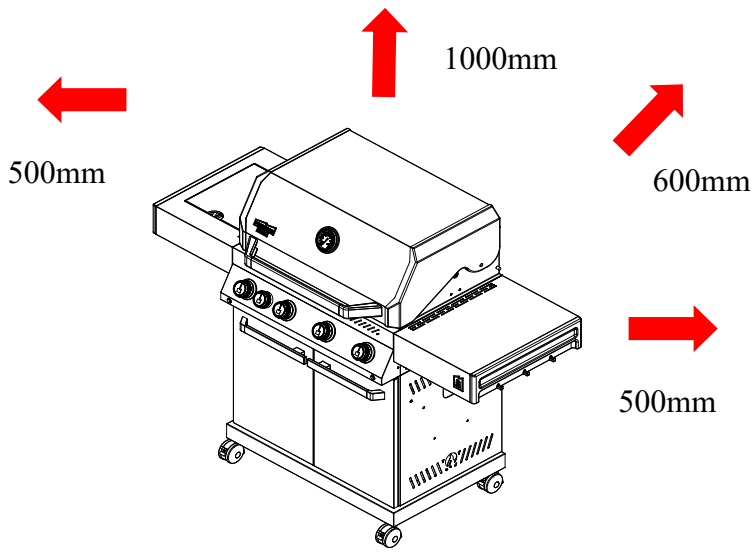

9. Safety precautions

a) Always test gas line for leaks at connector with soapy water after making connections.

b) The top lid must always be open when lighting the burner.

c) Use oven gloves and sturdy, long handled gas grill tools when cooking on the grill.

d) Be prepared if an accident or fire should occur. Know where the first aid kit and fire extinguishers are and know how to use them.

e) Keep any electrical supply cord and the fuel supply hose away from any heated surfaces.

f) Always cook with great care.

10. Lighting instructions

Caution: The lid must be open when lighting the burner!

Do not stand with your face directly over the gas grill when lighting it.

Your gas grill will have following method of ignition:

Pilot Gas Control Ignition:

With all gas controls on the Gas grill in the "OFF" position, turn the gas cylinder valve to the on position at the regulator. To create a spark you must push the control knob in (A) and hold in this position for 3-5 seconds to allow gas flow and then turn anticlockwise to" HIGH" (B). It can spark to the burner lighting tube (C). You will hear a "snap" from the igniter and you will also see a 3"-5" orange flame coming from the burner lighting tube at the left side of the burner (D).

Continue to hold the burner control knob in for two seconds after the "snap", this will allow gas to flow completely down the burner tube (E) and insure ignition.

When the burner is alight, adjacent burners will cross light when their controls are turned to "HIGH"

At "High" setting the burner flame should be approximately 12-20mm long with a minimum of orange flame. Turn the gas control fully anticlockwise for minimum setting.

Should you have any difficulty lighting your gas grill following the above steps, contact your dealer for advice.

Warning : If the burner still does not light ,turn the burner control knob to" OFF" and wait 5 minutes to let the gas clear before lighting again.

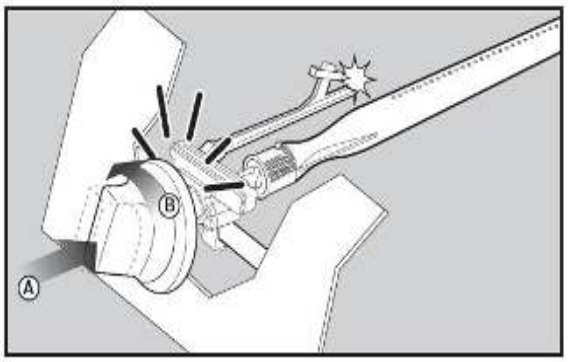

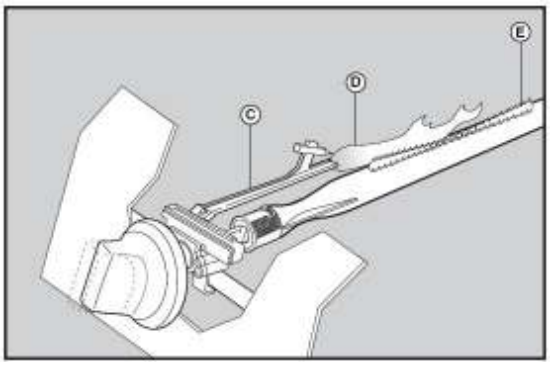

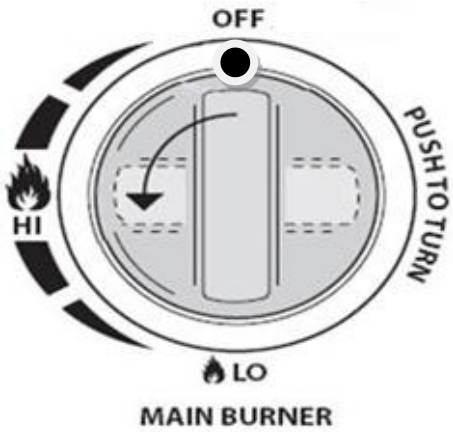

11. Storage

Your Gas Bottle must be stored outdoors in a well ventilated area and must be disconnected from your gas grill when not being used. Ensure that you are outdoors and away from any sources of ignition before attempting to disconnect your gas bottle from your gas grill.

When you are using your gas grill after a period of storage, please ensure to check for gas leaks and check for any obstructions in the burner etc. before using. Also follow the cleaning instructions to ensure gas grill is safe.

If gas grill is stored outdoors ensure to check that all areas under the front panel are free from any obstructions (insects etc.) This area must be kept free as this may affect the flow of combustion or ventilation air.

12. Cleaning instructions

Maintenance is recommended that every 90 days for your gas grill, but it is absolutely necessary to perform maintenance at least once a year. By doing so you will extend the life of your gas grill.

Your gas grill is easy to clean with minimum effort, just follow these helpful hints for cleaning convenience.

Trouble Shooting

Problem	**Possible Cause**	**Solution**
Burners will not light using The ignition system	LP gas cylinder empty	Replace with full cylinder
	Faulty regulator	Have regulator checked or replaced
	Obstructions in burners	Clean burners
	Obstructions in gas jets or hose.	Clean jets and hose
Low flame or flashback (fire in burner tube-a hissing or roaring noise may be heard)	Obstructions in burners	Clean burners
	Obstructions in gas jets or hose.	Clean jets and hose
	Windy conditions.	Use BBQ in a more sheltered spot
Gas valve knob difficult to turn.	Gas valve jammed	Replace gas valve

If your problem is not resolved from the information above, please call the Gas grill helpline.

a) Turn the burner on for 15 to 20 minutes. Grease drippings will be burned off from your grill as well as your lava rock. Ensure appliance is cold before continuing.
b) Grids should be cleaned periodically by soaking and washing in soapy water.
c) The interior surfaces of the grill housing cover should also be washed with hot, soapy water. Use a wire brush, steel wool or a scouring pad to remove stubborn spots.
d) Periodically check the burner to see that it is free from insects and spiders which may clog the gas system, deflecting gas flow. Ensure to clean venturi pipes on burner very carefully, make sure that there are no obstructions. We recommend that you use a pipe cleaner to clean the venturi pipe area.
e) Any modifications of this appliance may be dangerous and are not permitted.

13. Gas grill Safety Hints

Stand your gas grill on a safe level surface, away from inflammable items such as wooden fences or overhanging tree branches.
Never use your gas grill indoors!
Once lit do not move your gas grill or leave it unattended.
Keep children and pets at a safe distance from the gas grill.
Keep a fire extinguisher handy.
The gas grill will become hot when in use, so handle lids etc. with the help of gloves.
Ensure that the appliance has completely cooled down before storing.
Use outdoors only!
Read the instructions before using the gas grill.
Assessable parts may be very hot, Keep young children away!
Do not move the gas grill during using.
Turn off the gas supply at the gas container after use.
Any modification of the appliance may be dangerous and be not permitted.

14. Side burners

To get the maximum yield with the minimum consumption of gas it is handy to keep the following points in mind:

- Once the burner has been alighted, adjust the flame according to your needs, from “Maximum” to “Minimum” position.
- Use proper pan size (with flat bottom only) for each burner
- When the content of the pan start to boil, turn the knob down to “Reduced rate position” (small flame).
- Always put a lid on the pan.
- Suggestions use Ø pans in 20-24cm.

15. Electric energy

Products used in 4X1.5V cells to light the LED;
Battery type: AA 1.5V;
Remarks: Some models have lights, some without lights.

16. Replacing the igniter Battery

If igniters stop sparking, the battery should be replaced.

A. Change the igniter battery

1.The igniter button cap is located on the outside of the grill's right side panel.

2.Unscrew igniter button cap counterclockwise to remove. Remove battery from the battery compartment.

3.Replace with a new alkaline "AA" size battery Install, AA battery. battery with negative end in first.

4.Screw igniter button cap clockwise into place.

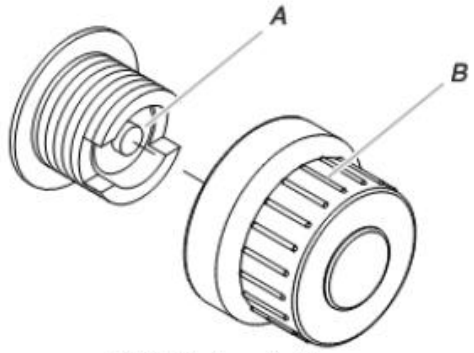

A."AA" size battery

B. Igniter cap

B.Change the led battery

1.Find the battery box，open the lid.

2. Put 4pcs "AA" size battery,the positive and negative pole of the battery should keep the same as the pole in box.

3.Close the lid.

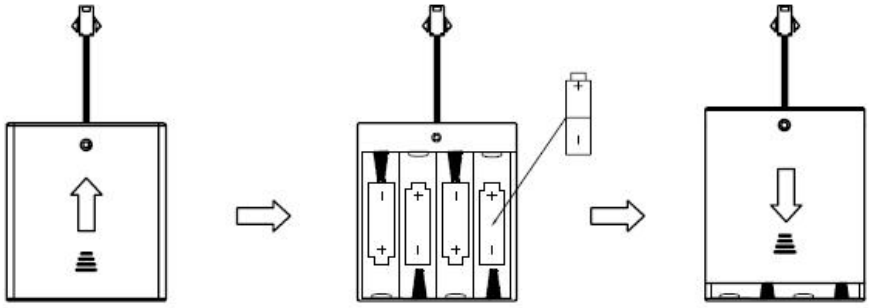

Correct Disposal of this product	
	This marking indicates that this product should not be disposed with other household wastes throughout the EU. To prevent possible harm to the environment or human health from uncontrolled waste disposal, recycle it responsibly to promote the sustainable reuse of material resources. To return your used device, please use the return and collection systems or contact the retailer where the product was purchased. They can take this product for environmental safe recycling.

17.Change main burner/IR main burner

1.First ,find out which main burner has been broken, if it's not the far left one(if it's the far left one, just remove the broken one), remove from the far right burner, take out the circlip, take out the main burner, remove the transmission frame; If the machine do not have transmission frame(like American version), just remove the main burner, no need to take step 2.

2. Repeat step 1, from right side to left side to remove main burner and transmission frame, until remove the broken one.

3. Change the bad main burner, from left to right by turn to set up main burner and transmission frame (if do not have transmission frame, just change the main burner directly), use circlip to set.

18. Troubleshooting

Problem	Possible Cause	Solution
The burners do not ignite.	The gas cylinder is empty / the regulator is faulty.	Replace the gas cylinder. Check the regulator and replace it if it is faulty.
Weak flame or sudden flare-ups (a hissing or roaring sound may be heard from the burners).	The burners or their nozzles are clogged.	Clean the burners, burner nozzles, gas line, and hose.
	Strong wind.	Move the grill to a more wind-protected location.
The burner control knob is difficult to turn or jammed.	The gas line is clogged.	Clean the gas line or replace it.

If the problem cannot be resolved using the actions listed above, contact the seller or the store where the grill was purchased.

Proper disposal of the product	
	This marking indicates that this product should not be disposed of together with other household waste. To prevent possible harm to the environment or human health from uncontrolled waste disposal, recycle it responsibly to promote the sustainable reuse of material resources. To return a used device, please use designated return and collection systems or contact the retailer from whom the product was purchased.